VECTOR OPTICS®

SCRAPPER

RED DOT SIGHT USER MANUAL

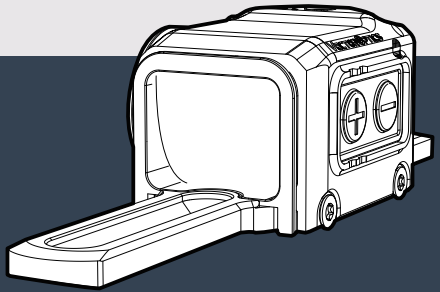

SCRD-87

READ IT BEFORE USE!!!

READ AND UNDERSTAND THE CONTENTS OF YOUR FIREARM'S AND SCOPE MANUAL. FOLLOW ALL STANDARD SAFETY PRECAU-TIONS AND PROCEDURES DURING FIREARM OPERATION.

▼ *Scan the QR code to learn more about VectorOptics*

VECTOROPTICS | USER MANUAL | FACEBOOK | INSTAGRAM | 中文说明书

NEVER LOOK AT THE SUN THROUGH THE RED DOT SIGHT (OR ANY OTHER OPTICAL INSTRUMENT).
IT MAY PERMANENTLY DAMAGE YOUR EYES.
MAKE SURE FIREARMS ARE UNLOADED AND POINTED IN THE SAFE DIRECTION.

CONTENTS

MOUNTING 3

ZEROING 6

TURNING ON & ILLUMATION ADJUSTMENT 7

BATTERY EXCHANGE 8

MAINTENANCE 9

STORAGE 10

RETICLE 11

WARRANTY 12

NOTES 14

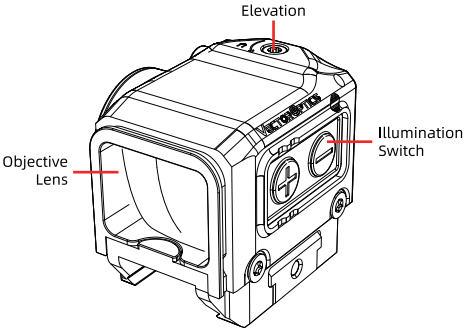

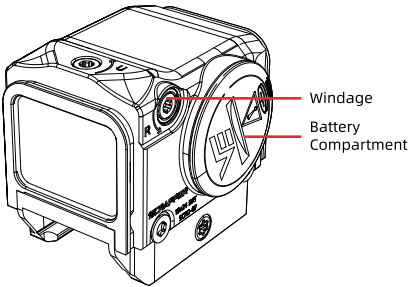

MOUNT

The red dot sight is installed on the gun by means of its integrated picatinny mount. Place the scope objective lens towards the muzzle.

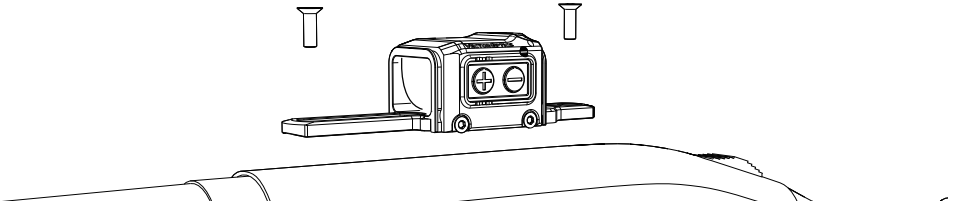

SCREWS MAY COME WITH THE SIGHT:

Screw Size	M4x7	8-40	8-36	6-48
Tightening Torque	3.12 N·m (27.6 in-lb)	3.2-3.4 N·m (28-30 in-lb)	3.2-3.4 N·m (28-30 in-lb)	2.0-2.5 N·m (18-22 in-lb)

The red dot sight comes with an integrated mounting base that can be installed directly onto compatible shotgun receivers without an additional mounting rail.

① **POSITION THE RED DOT SIGHT:** Align the rear mounting hole of the sight with the rearmost mounting hole on the shotgun receiver.

② **SELECT THE SCREWS:** Choose the appropriate screws supplied with the sight.

③ **INSTALL THE SCREWS:** Loosely install one screw in the rear mounting hole, then loosely install a second screw in the front mounting channel. If additional mounting holes are available, loosely install the third and fourth screws as needed.

④ **TIGHTEN THE SCREWS:** First, tighten the rearmost screw in the rear mounting hole to the specified torque. Next, tighten the foremost screw in the front mounting channel to the specified torque. Then tighten the remaining screws to the same torque.

⑤ **RECHECK ALL SCREWS:** Verify that all screws are properly tightened and that the sight is securely mounted.



BEFORE INSTALLATION, ENSURE THE SHOTGUN IS COMPLETELY UNLOADED. INSPECT THE BARREL, CHAMBER AND MAGAZINE TO CONFIRM THERE IS NO AMMUNITION INSIDE THE FIREARM.

ZEROING

The sight features elevation and windage adjustments. Referring to the point of impact you will need to adjust both windage and elevation screws. The elevation is the vertical (up and down) adjustment, usually on the top of the sight. Windage is the horizontal (left-to-right) adjustment, usually on the right of the sight. With the sight is mounted aim at a target 50 yards away. Slowly shoot a small 3 to 5 round test group onto your target. Adjust windage & elevation screws in the direction you want to move the bullet impact. Should your impacts be below your point of aim, dial UP to reach zero.

TURNING ON & ILLUMINATION ADJUSTMENT

The sight is activated by using the digital on/off switch placed on the left of the sight. The sight has 9 levels of visible & 2 NV dots. Press the '+' switch for 1 second to turn the unit on. Subsequently, pressing the '+' switch will increase the dot intensity. Press the '-' switch will decrease the dot intensity. Press and hold the '-' switch for more than 3 seconds to turn the sight off.

Motion Sensor (MOS) : If the sight comes with this feature, it will power off when it is at rest after a few minutes and power on when it senses any motion.

BATTERY EXCHANGE

The red dot scope is powered by 1 piece of the CR2032 button battery. Should the dot grows dim or not turn on, you will need to exchange the battery. Release the battery compartment cover. Remove the used battery from the battery compartment. Insert a new one from a reputable manufacturer. Screw on the battery compartment cover.

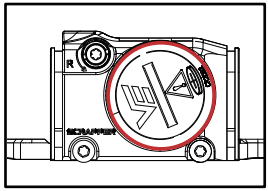

⚠ WARNING

- ***INGESTION HAZARD:*** *This product contains a button cell or coin battery.*
- ***DEATH:****or serious injury can occur if ingested.*
- *A swallowed button cell or coin battery can cause Internal chemical* **burns** *in as little as* **2 hours.**
- ***Keep*** *new and used batteries* ***out of reach of children****.*
- ***Seek immediate medical attention*** *if a battery is suspected to be swallowed or inserted inside any part of the body.*
- *Battery misuse or abuse may result in leakage, fire or explosion.*

MAINTENANCE

Your red dot sight, though amazingly tough, is a precision instrument that deserves reasonable cautious care.

- When cleaning the lens, first blow away any dirt and dust, or use a soft lens brush. Fingerprints and lubricants can be wiped off with lens tissue, or soft clean-cotton cloth, moistened with lens cleaning fluid.
- All moving parts of the red dot sight are permanently lubricated. Do not try to lubricate them.
- No maintenance is needed on the red dot sight's outer surface, except to occasionally wipe off dirt or fingerprints with a soft cloth.
- Use lens covers whenever convenient.

STORAGE

Avoid storing the red dot sight in hot places, such as the passenger compartments of vehicles on hot days. The high temperatures could adversely affect the lubricants and sealants. A vehicle's trunk, a gun cabinet, or a closet is preferable. Never leave the red dot sight where direct sunlight can enter either the objective lens. Damage may result from the concentration (burning glass effect) of the sun's rays.

RETICLE PATTERN

Multi Reticle (If applicable)

Press and hold the “+” and “–” buttons simultaneously to switch reticle patterns.



3MOA

SCRD-87

3MOA



3+65MOA

SCRD-D87

VECTOR OPTICS TAILED VIP LIFETIME WARRANTY

Your VectorOptics Continental, Tauron, Paragon, Scrapper, and Frenzy line products are covered by our T-VIP lifetime warranty. We will, at our option, either repair or replace your VectorOptics product without any cost if it is damaged or defective. If we can't repair your damaged product, we will replace it with a brand new one in perfect condition. We proudly stand behind our products. You have our word that we will do what it takes to retain your business as a satisfied customer. You can count on our T-VIP lifetime warranty.

- Unlimited full lifetime warranty.
- Reply to you in 1 working day.
- Free repair or replacement.
- Fully transferable.
- No invoice or receipt is needed.
- No question asked, however, we do appreciate your feedback.
- We pay for shipping back to you.

This warranty does not cover product loss, theft, deliberate damage, abuse, misapplication, or modification. This warranty does not apply to electronic components or batteries.

For warranty service please contact our Customer Service Department online at service@vectoroptics.com for return instructions. If you need to return the product, please ensure the shipment and keep the tracking records. We can not be responsible for your product until it has been received by our Customer Service Department.For products not directly purchased from us, please contact the local dealer for applicable warranty info.

Any warranty must be registered and complete warrantyterms by the link:



NOTES

SCRAPPER

RED DOT SIGHT

Manual # Scrapper Series
2026102101



:www.vectoroptics.com
@vector_optics