VOW-10BDC (MOA)

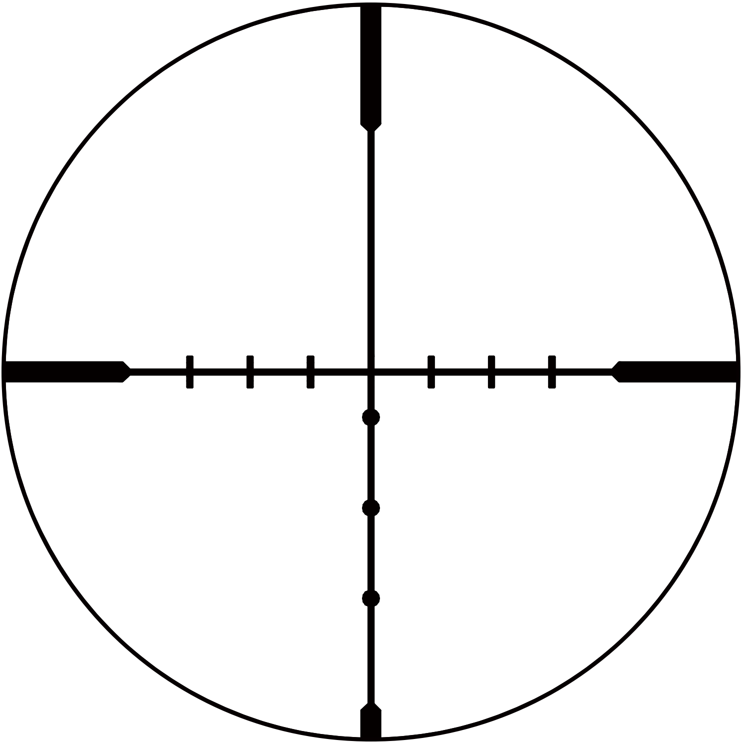

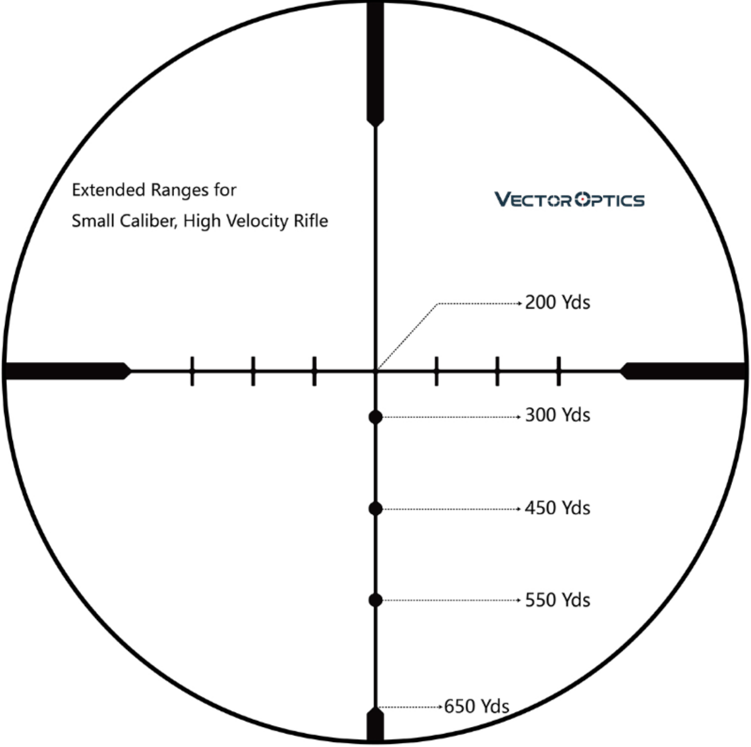

Extended Ranges for
Small Caliber, High Velocity Rifle

VECTOR OPTICS
200 Yds
300 Yds
450 Yds
550 Yds
650 Yds

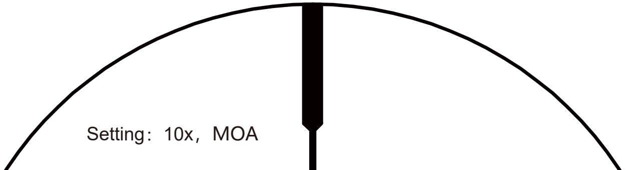

Setting：10x，MOA

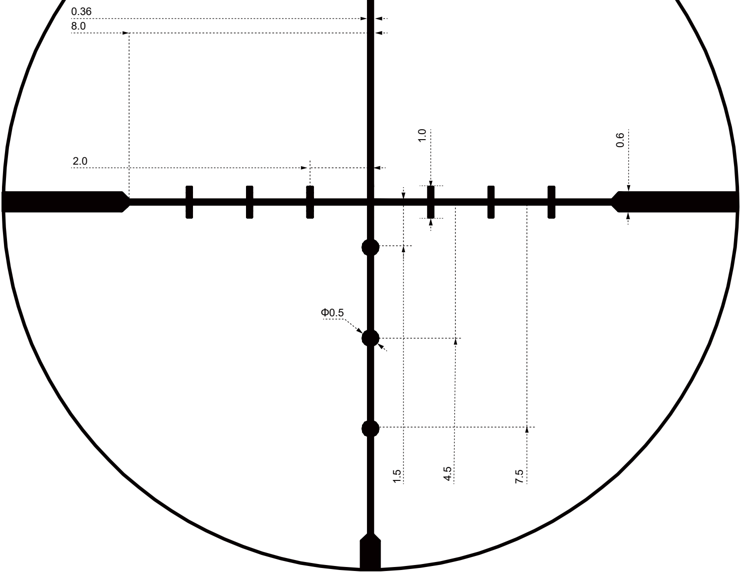
0.36
8.0
2.0
1.0
0.6
Φ0.5
1.5
4.5
7.5

VOI-10BDC (MOA)

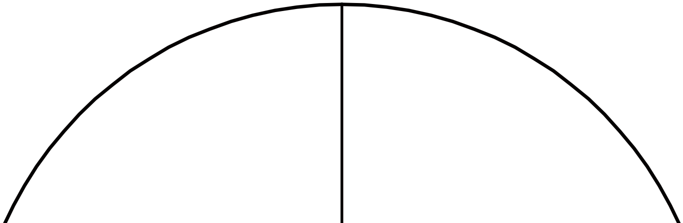

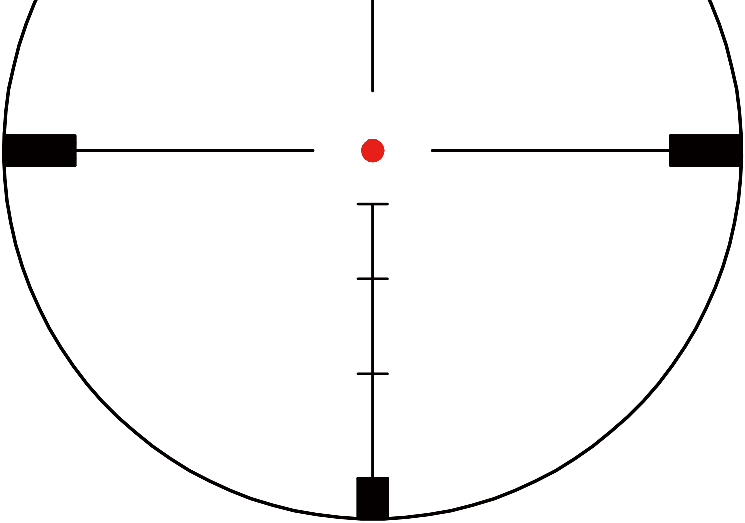

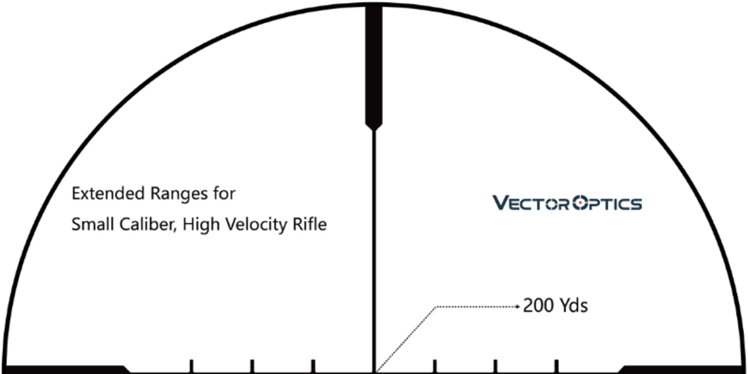
Extended Ranges for
Small Caliber, High Velocity Rifle
VECTOR OPTICS
200 Yds

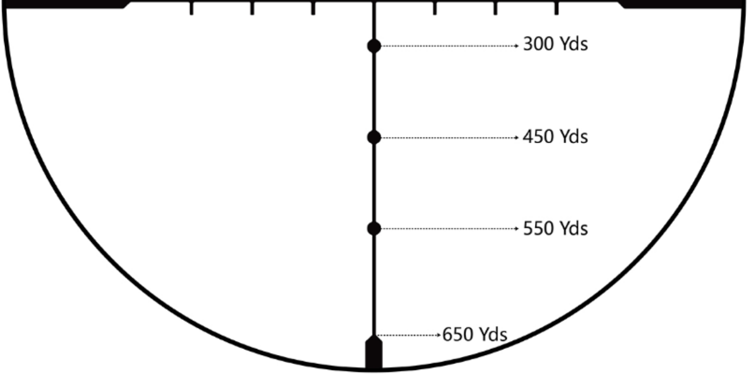
300 Yds
450 Yds
550 Yds
650 Yds

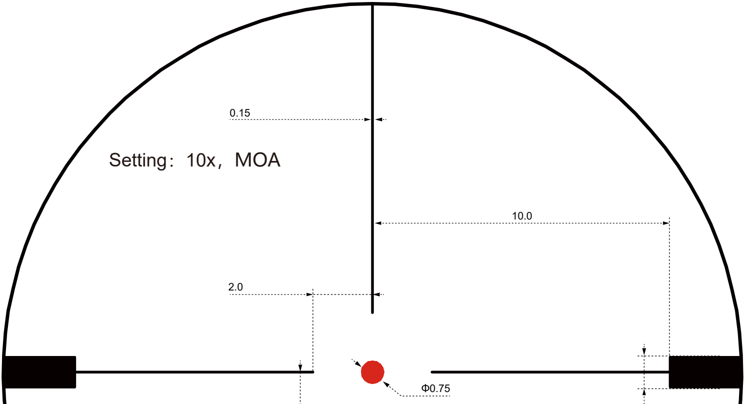
0.15
Setting：10x，MOA
10.0
2.0
Φ0.75

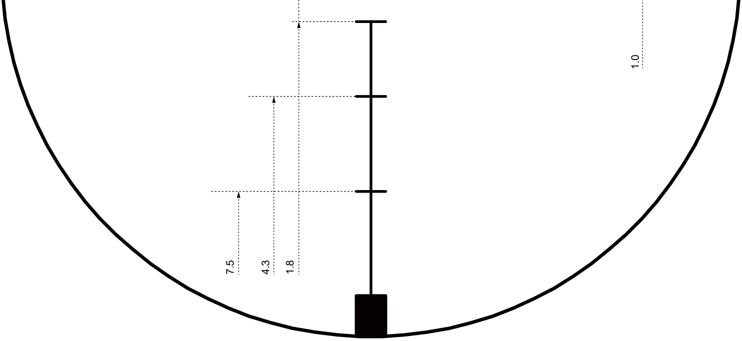

VHU-3 (MIL)

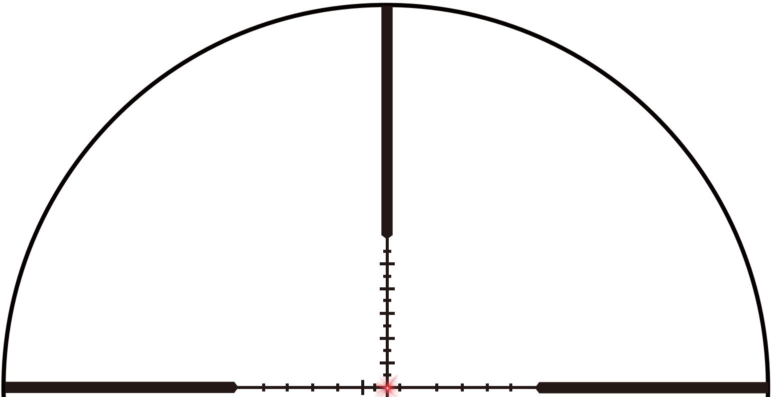

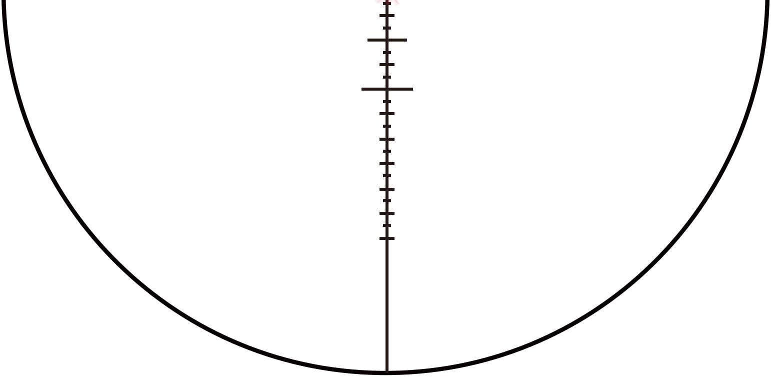

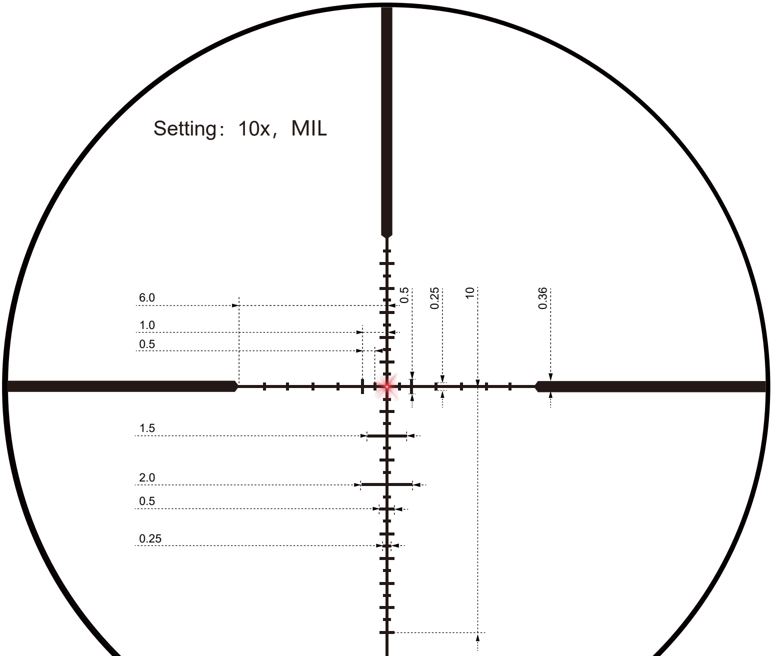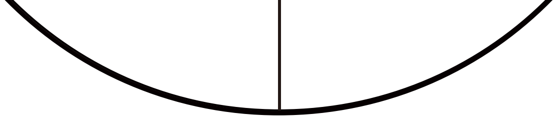
Setting：10x，MIL
0.5
0.25
10
0.36
6.0
1.0
0.5
1.5
2.0
0.5
0.25