VTC-C(MIL)

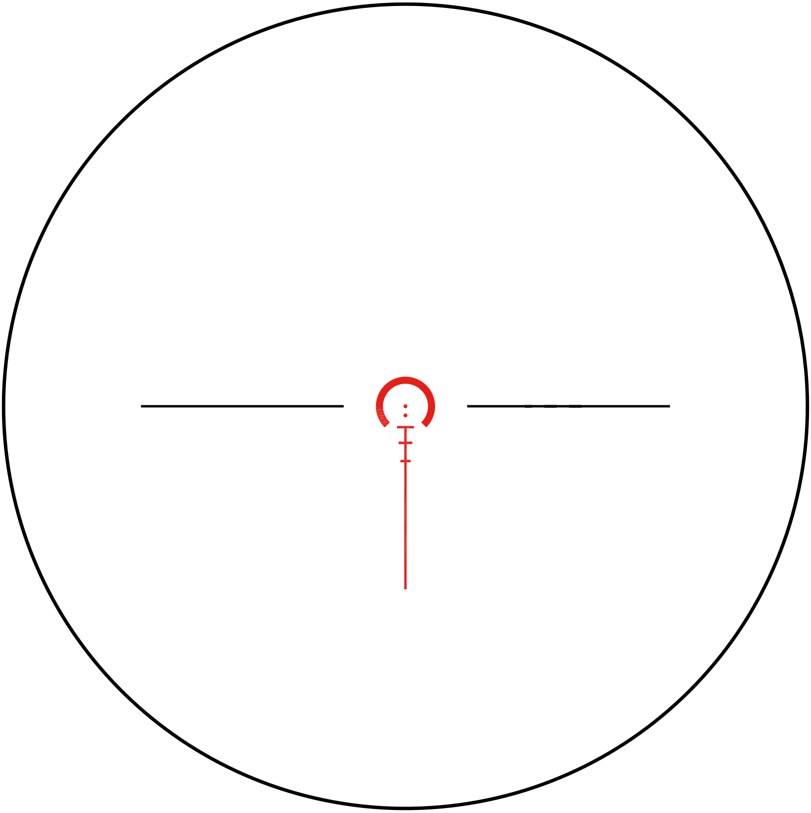

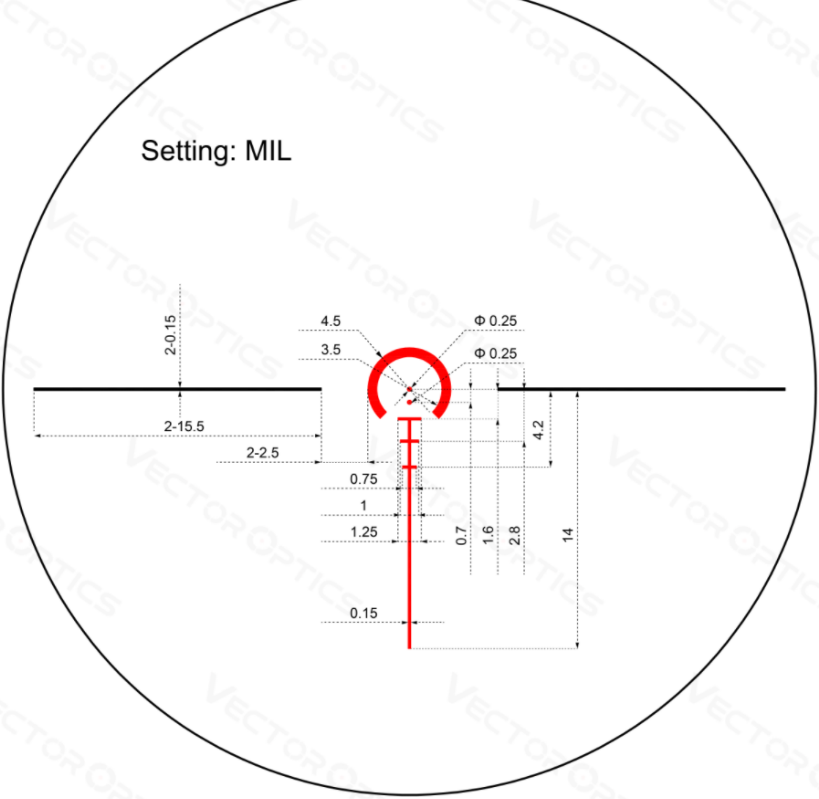
Setting: MIL
2-0.15
4.5
3.5
Φ 0.25
Φ 0.25
2-15.5
2-2.5
4.2
0.75
1
1.25
0.7
1.6
2.8
14
0.15

VECTOR OPTICS

MPX1(MIL)

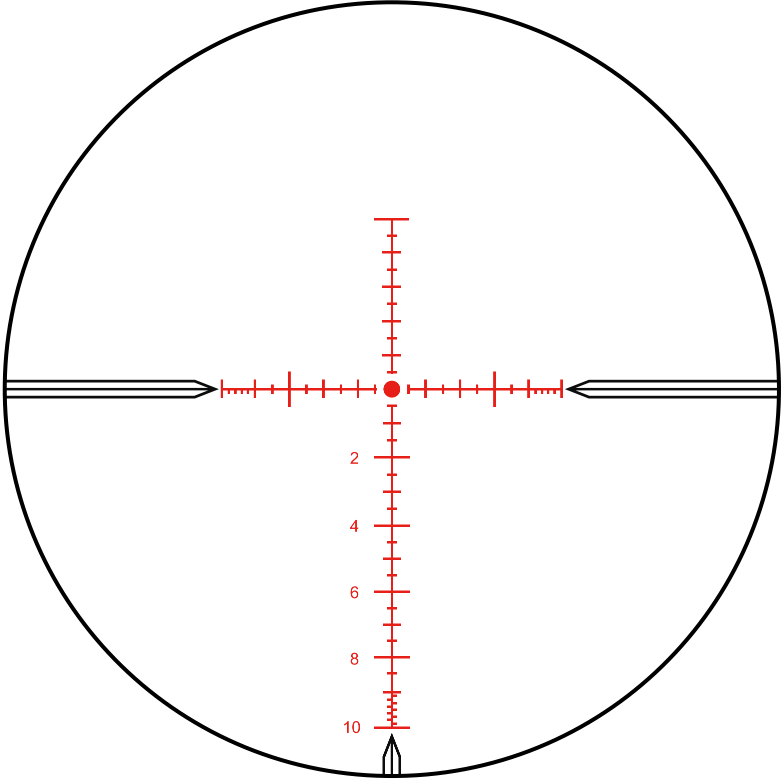

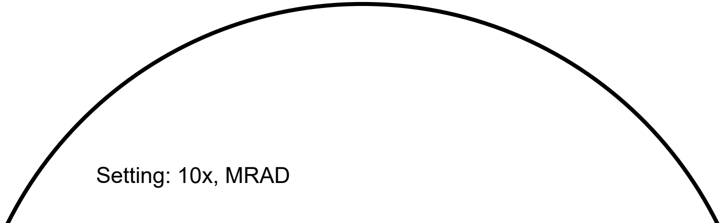

Setting: 10x, MRAD

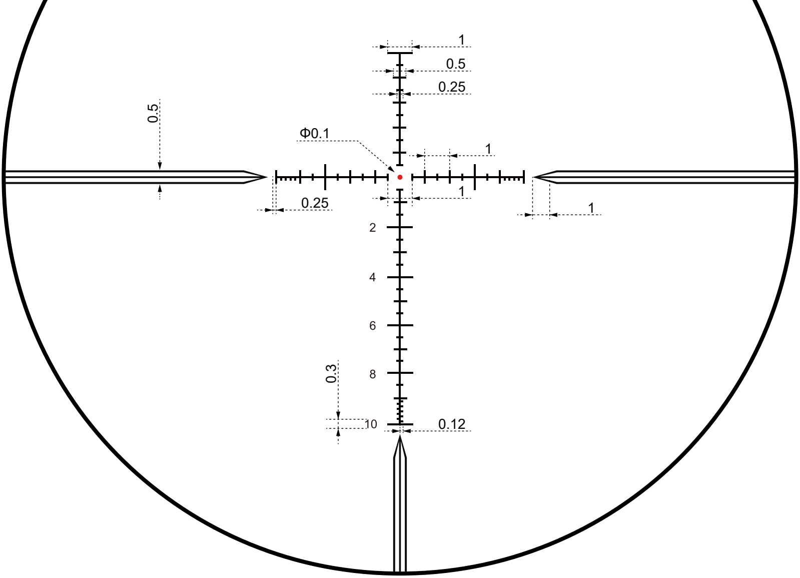
1
0.5
0.25
0.5
Φ0.1
1
0.25
1
1
2
4
6
8
0.3
10
0.12

VTC-SMIL (MIL)

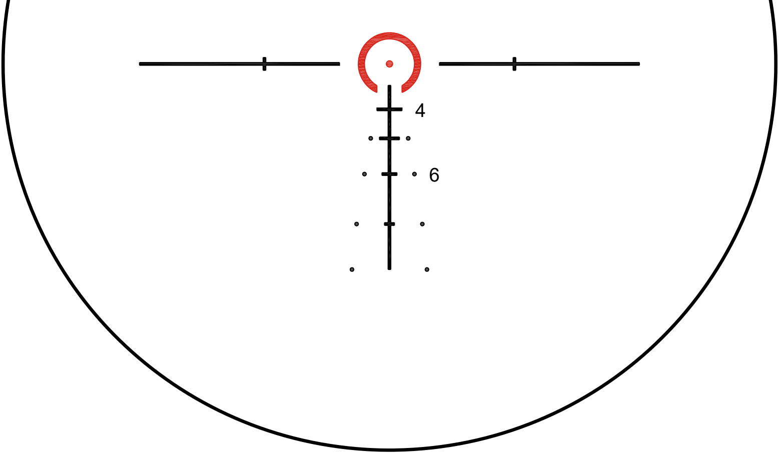

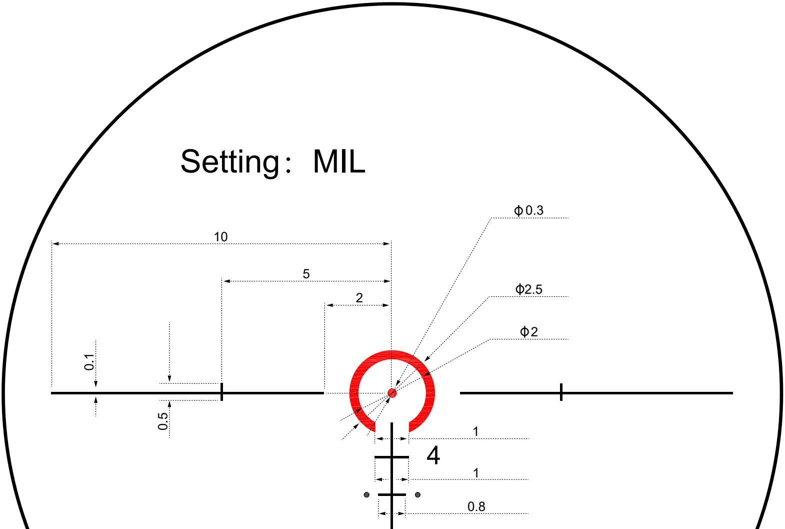
Setting： MIL
ϕ0.3
10
5
ϕ2.5
2
ϕ2
0.1
0.5
1
4
1
0.8

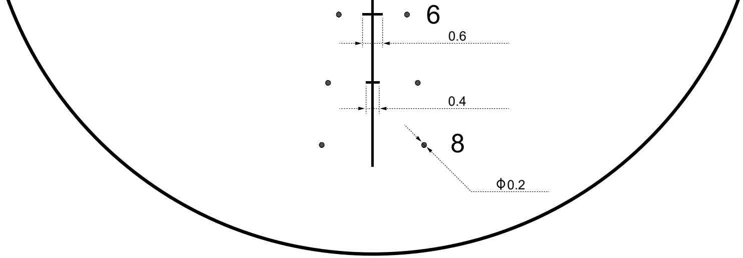

MPX1 (MIL)

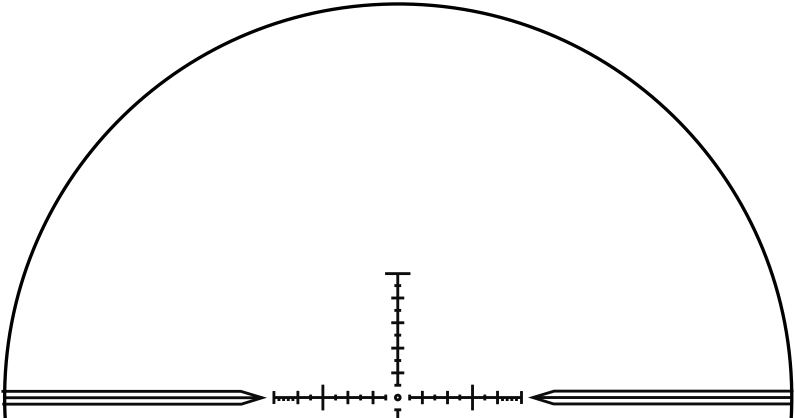

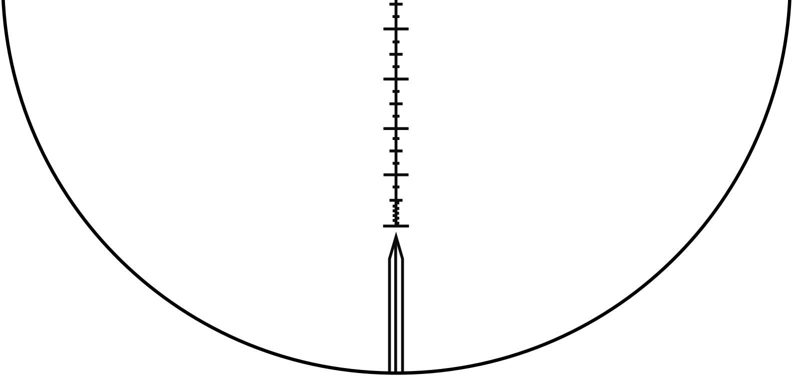

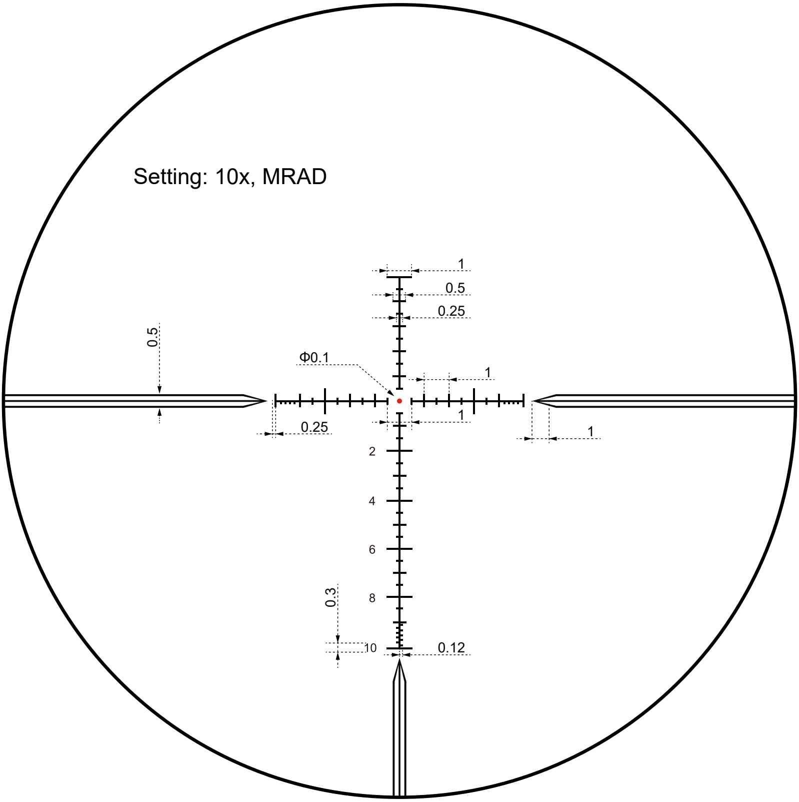

Setting: 10x, MRAD

1
0.5
0.25
Φ0.1
0.5
1
1
0.25
1
2
4
6
8
0.3
10
0.12